



Xylo

Panorama® technology
for small and precious quantities

Design Marc Sadler

Gelato

Welcome to Xylo

Xylo is designed to bring your artisan gelato into other food service environments such as restaurants, pastry shops and cafés, opening up to new and exciting possibilities.

Perfection is in the details

Every element of Xylo is designed to offer a superior finish and maximum attention to detail.

- **Panorama® technology**.
- On-board or remote **condensing unit**.
- White painted metal **cladding**.
- 4 **wheels** perfectly integrated into the structure .
- Dedicated **pans** in food-grade white ABS.
- **Display surface** tilted at 9 degrees.
- Possibility for 1 or 2 operating **temperatures.**
- LED **lighting** between the front panel and plinth.

Freshly made

Perfectly preserves the flavour, appeal and properties of the food.

- Excellent **preservation** performance.
- **Different temperatures** for different products.
- Perfect **insulation** with double glazed doors and hermetic and servo-assisted closure.

General features

The **supporting structure** of Xylo is made of galvanised tubular metal.

The **external cladding**, front panel and sides are in galvanised metal with RAL 9010 matt white epoxy powder coating. On request, LED lighting is available between the front panel and plinth, as well as a kit with 4 hidden wheels for easy handling and movement.

The display **top** is tilted at 9 degrees to optimise the visibility of gelato, and is fitted with a perimeter frame with LED lighting and food-grade PVC seal for hermetic closure of the upper glass.

The **internal tank** has been specifically designed to house 5 gelato pans in food-grade white ABS, each with 1.3 kg capacity, supplied with the display case.

The **refrigeration** is ventilated with on-board or remote condensing unit and defrosting is carried out manually by shutting down the system. For maximum service flexibility, it is possible to choose between a single or double temperature. The rear ventilation grille is removable for easy access to the motor compartment. Xylo is available with one level only.



Data sheet

For more product information click here

› CLIMATIC CLASS 7

| Gelato +35°C (95°F) - 75% U.R.

› SERVICES

| Gelato -2°C; -18°C (+28.4°F; -0.4°F)

› SIZE

| mm (inches)
| H 957 (37,67") H 823 (32,40") customer side
| L 761 (29,96")/1351 (53,19")
| P 854 (33,62)

› ENERGY CLASS

| click here

› FINISHING

| White RAL 9010

› TECHNICAL DRAWINGS

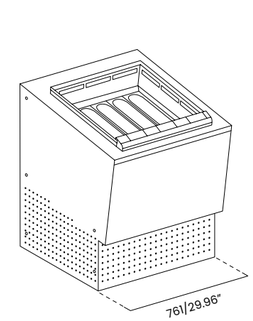

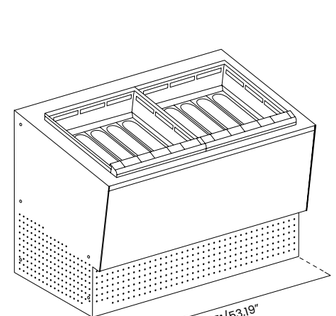

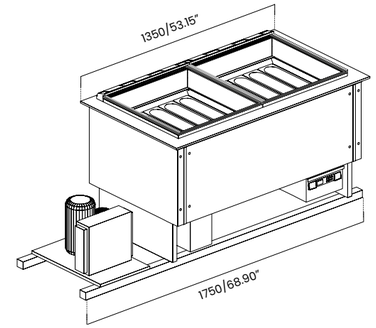

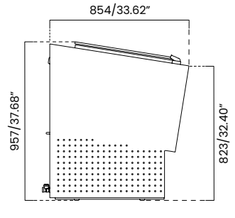

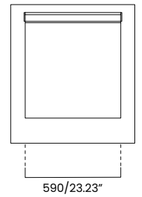

XYLO PANS

